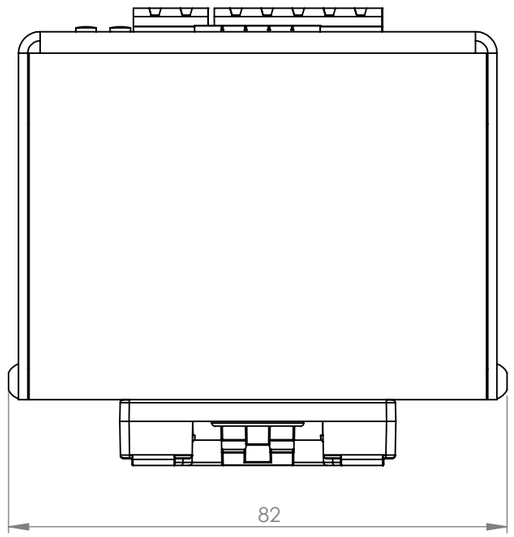

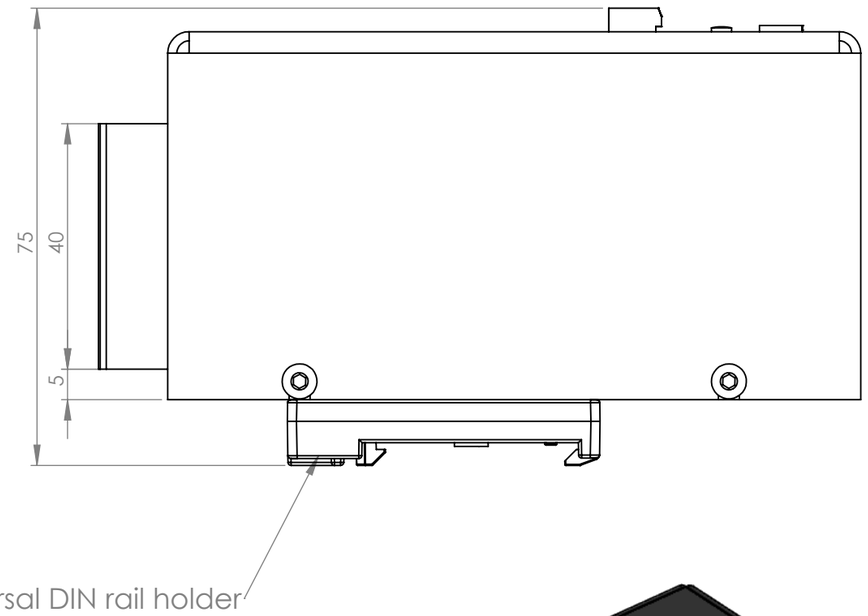

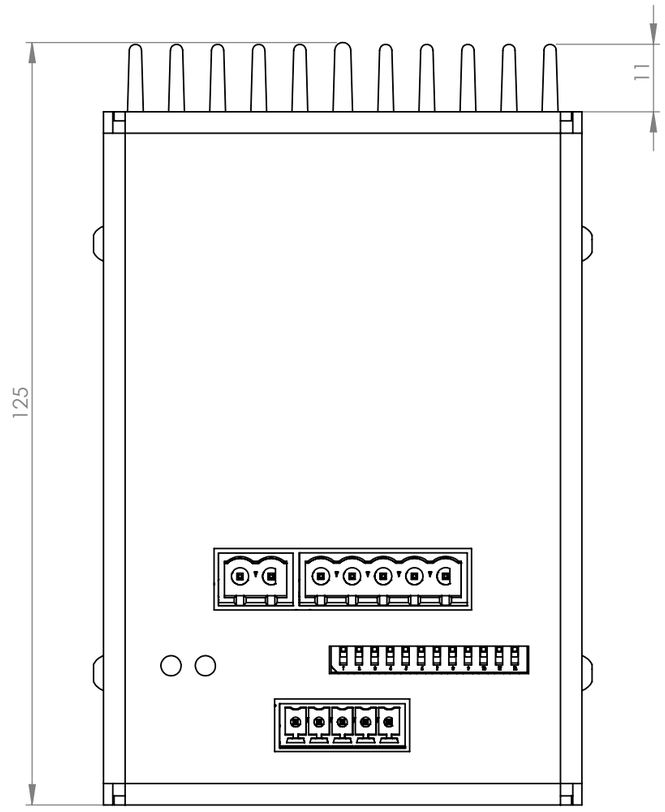

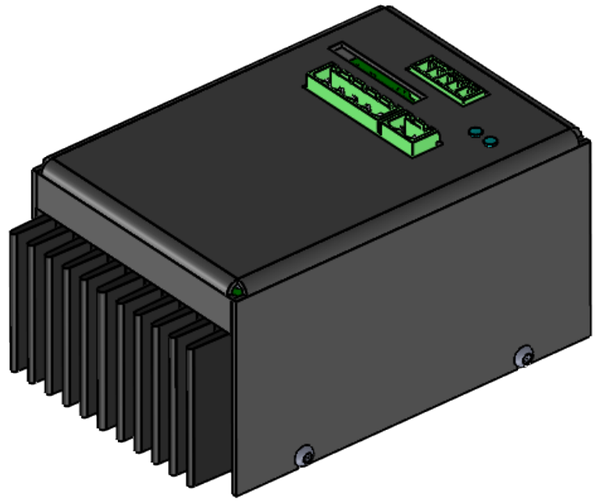

Material									
Surface treatment									
						Class	K	Undimensioned bevels	0.5x45°
Linear tolerance (ISO 2768-2)						Class	m		
0.5 ÷3	>3÷ 6	>6÷ 30	>30÷ 120	>120 ÷400	>400÷ 1000	>1000 ÷2000	>2000 ÷4000	Undimensioned radii	R 0.5
±0.1	±0.1	±0.2	±0.3	±0.5	±0.8	±1.2	±2	All dimensions are in [mm]	

	Date	Name
Designed	30/10/2015	A. Montagna
Drawn	06/12/2019	S. Del Quarto
Approved	-	

OPTO ENGINEERING

OPTO ENGINEERING S.r.l. - Mantova, ITALY - Tel. +39 0376 699111 - www.opto-engineering.com

Mass	Scale 1:1
Part No.	
Description (EN)	-
Descrizione (IT)	Assieme serie LTDV1CH-17V
Drawing No.	Sheet 1 of 1

Proprietary and confidential. All rights reserved. No copy, dissemitation or circulation is allowed unless specifically authorized in writing by OPTO ENGINEERING S.r.l. Any violation could be legally persecuted.